Fiber Optics

Passive components portfolio

Edition 2019/08

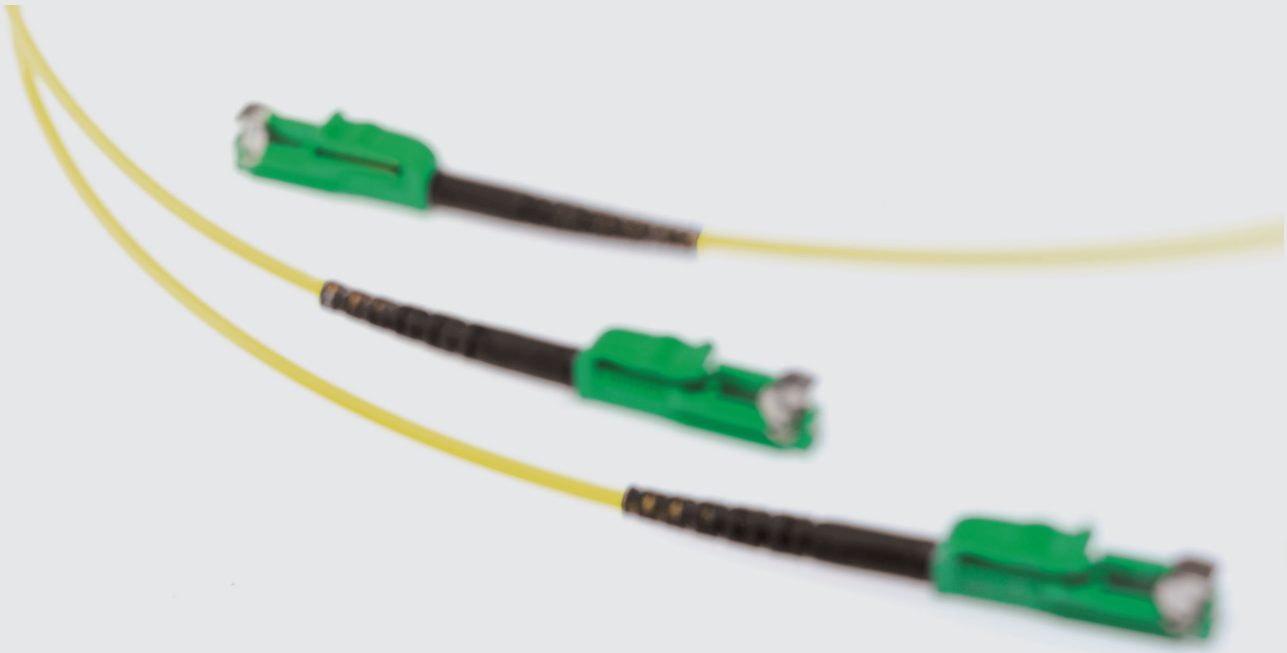

HUBER+SUHNER
Excellence in Connectivity Solutions

Reliably connected

Your partner for system solutions

HUBER+SUHNER is a leading international producer and supplier of electrical and optical interconnectivity components and systems. Core capabilities in radio frequency, fiber optic and low frequency technology are united under a single roof. The success of the company's high-grade standard products and customised applications based on its cutting-edge know-how in radio frequency and microwave technology, supported by advanced simulation processes.

HUBER+SUHNER offers a wide range of fibre optical cables, optimized for fix or mobile applications at indoor and outdoor areas. Due to new market demands innovative products are developed and tested according to international standards, which fulfil high mechanical and thermal conditions as well as fire requirements.

HUBER+SUHNER
Excellence in Connectivity Solutions

Introduction

Terminologies of passive network components

Terms	Description
Attenuation	Reduction of the signal magnitude, or loss, caused by absorption and scattering. Normally expressed in decibels (dB)
Attenuator	A passive device for reducing the amplitude of a signal without appreciably distorting the waveform
Bidirectional	A device, operating in both directions
Broadband device	Optical broadband devices, covering a wide range of wavelengths
Center wavelength	The nominal operating wavelength of an optical device
Coupler	A bidirectional device with three or more fiber ends, combining the signals of two or more input ports into one output port. Also referred as splitter.
Decibel (dB)	A logarithmic unit of measurement for calculating the attenuation of an optical device or an optical system. A change of –3 dB equates to the halving of the optical power
Demultiplexer	A device that separates two or more multiplexed signals into its original single signals; the inverse of a multiplexer
Directivity	The amount of undesired optical signals observed at a given input port of a device. Also referred as near-end crosstalk (NEXT)
Dual window	A passive optical component that is optimised to operate a two different center wavelengths. For example at 1310 nm and 1550 nm
Excess loss	Attenuation, or loss, of the optical component itself, not included any other attenuation effects of the device
Fused Biconical Tapering (FBT)	A manufacturing process for passive optical network components. It consist of twisting two bare fibers exactly to each other, stretching and then fusing the fibers together; «tapering»
Insertion Loss (IL)	A sum of excess loss, splitting loss and loss caused by other optical effects
Isolation	The amount of undesired optical signals observed at a given output port of a device. Also referred as far-end crosstalk (FEXT)
Multiplexer	A device that combines two or more signals into a single output; the inverse of a demultiplexer. Multiplexer are usually operating bidirectional
Operating wavelength	The wavelength, or wavelength range, on that a passive optical component is optimised for operating
Polarisation Dependent Loss (PDL)	Attenuation caused by the state of polarisation (SOP). This optical effect results in a deviation between the maximum and minimum of loss on an optical device
Planar Lightwave Circuit (PLC)	A manufacturing process for optical passive network components. It consists of a waveguide array that is applied to a silica chip by using a photolithographic masking process
Return Loss (RL)	The ratio of optical power reflected back along the path of transmission, from either the coupling region, a connector or a terminated fiber. Normally expressed in decibels (dB)
Single window	A passive optical component that is optimised to operate at a single specified center wavelengths. For example at 1310 nm or 1550 nm
Splitter	A bidirectional device with three or more fiber ends, divides the signal of one input port into two ore more output ports. Also referred to as coupler
Splitting ratio	The percentage of optical power transferred to an output port of an optical device, with respect to the total power on all output ports of the device
Uniformity	The maximum deviation of insertion loss between the different ports on a device within the operating wavelength
Wavelength Division Multiplexing (WDM)	Transmitting various signals at different wavelengths through the same fiber

Introduction

Overview of optical transmission band

Band	Wavelength range	Description
O – Band	1260 to 1360 nm	Original band
E – Band	1360 to 1460 nm	Extended band
S – Band	1460 to 1530 nm	Short wavelength band
C – Band	1530 to 1565 nm	Conventional band
L – Band	1565 to 1625 nm	Long wavelength band
U – Band	1625 to 1675 nm	Ultra long wavelength band

Conversion of attenuation to transmission ratio and attenuation ratio

Attenuation (dB)	Transmition ratio (%)	Attenuation ratio (%)
1.0	~ 79.40	~ 20.60
2.0	~ 63.10	~ 36.90
3.0	~ 50.10	~ 49.90
4.0	~ 39.80	~ 60.20
5.0	~ 31.60	~ 68.40
6.0	~ 25.10	~ 74.90
7.0	~ 19.90	~ 80.10
8.0	~ 15.80	~ 84.20
9.0	~ 12.60	~ 87.40
10.0	~ 10.00	~ 90.00
11.0	~ 7.90	~ 92.10
12.0	~ 6.30	~ 93.70
13.0	~ 5.00	~ 95.00
14.0	~ 4.00	~ 96.00
15.0	~ 3.20	~ 96.80
16.0	~ 2.50	~ 97.50
17.0	~ 2.00	~ 98.00
18.0	~ 1.60	~ 98.40
19.0	~ 1.30	~ 98.70
20.0	~ 1.00	~ 99.00

1 x n/2 x n broadband PLC splitter – small case with ribbon fiber single-mode

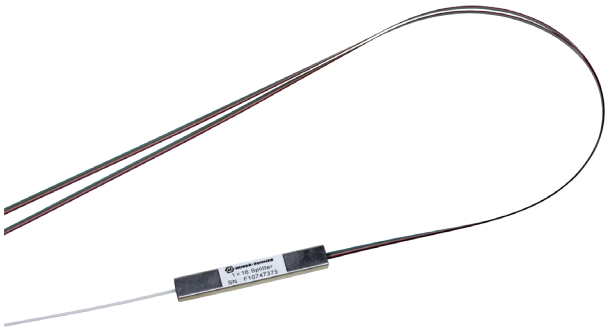

Features

- PLC splitter for all wavelength bands
- Low excess loss
- Low polarisation dependent loss (PDL)
- Excellent mechanical and environmental performance
- Telcordia GR-1209/GR-1221

Applications

- Telecommunication networks
- CATV networks data communication
- Network monitoring

Generic specifications 1 x n standard and premium grade*

Parameter	Unit	1 x 2	1 x 4	1 x 8	1 x 16	1 x 32	1 x 64
Operating wavelength	nm	1260 to 1650					
Insertion loss standard grade	dB	≤ 4.0	≤ 7.3	≤ 10.5	≤ 13.8	≤ 17.0	≤ 20.6
Uniformity standard grade	dB	≤ 0.6	≤ 0.6	≤ 0.8	≤ 1.2	≤ 1.5	≤ 1.8
PDL standard grade	dB	≤ 0.3	≤ 0.3	≤ 0.3	≤ 0.3	≤ 0.3	≤ 0.3
Insertion loss premium grade	dB	≤ 3.8	≤ 7.0	≤ 10.2	≤ 13.5	≤ 16.8	≤ 20.3
Uniformity premium grade	dB	≤ 0.5	≤ 0.5	≤ 0.8	≤ 1.2	≤ 1.2	≤ 1.8
PDL premium grade	dB	≤ 0.2	≤ 0.2	≤ 0.2	≤ 0.2	≤ 0.2	≤ 0.3
Return loss	dB	≥ 55					
Directivity	dB	≥ 55					
Operating temperature	°C	−40 to +85					
Package dimension (L x W x H)	mm	40 x 4 x 4			47 x 7 x 4		58 x 12 x 4

* Without connector loss

Generic specifications 2 x n standard and premium grade*

Parameter	Unit	2 x 4	2 x 8	2 x 16	2 x 32
Operating wavelength	nm	1260 to 1650			
Insertion loss standard grade	dB	≤ 7.5	≤ 10.8	≤ 14.3	≤ 17.8
Uniformity standard grade	dB	≤ 1.2	≤ 1.2	≤ 1.8	≤ 1.8
PDL standard grade	dB	≤ 0.3	≤ 0.3	≤ 0.3	≤ 0.3
Insertion loss premium grade	dB	≤ 7.3	≤ 10.5	≤ 14.0	≤ 17.5
Uniformity premium grade	dB	≤ 1.2	≤ 1.2	≤ 1.8	≤ 1.8
PDL premium grade	dB	≤ 0.25	≤ 0.25	≤ 0.3	≤ 0.3
Return loss	dB	≥ 55			
Directivity	dB	≥ 55			
Operating temperature	°C	−40 to +85			
Package dimension (L x W x H)	mm	55 x 7 x 4			60 x 7 x 4

* Without connector loss

Order code

1	2	-	3	4	5	6	-	7	8	-	9	10	-	11	-	12	/	13	-	14	15

1	Splitter type
P	PLC splitter

2	Number of ports
1002	1 x 2
1004	1 x 4
1008	1 x 8
1016	1 x 16
1032	1 x 32
1064	1 x 64
2004	2 x 4
2008	2 x 8
2016	2 x 16
2032	2 x 32

3	Case type
A	Small case with ribbon fiber output

4	Operating wavelength
A	1260 to 1650 nm

5	Fiber type – splitter quality grade
A	Single-mode 9/125 µm – standard splitter grade
B	Single-mode 9/125 µm – premium splitter grade

6	Splitting ratio
A	Equal

7	Lead type on input port
1	250 µm bare fiber
2	0.9 mm loose tube

8	Lead type on output port
4	Ribbon fiber (not de-ribbonised, no fan-out divider)

9	Lead length on input port
10	Lead length on output port
05	0.5 m
06	0.6 m
07	0.7 m
08	0.8 m
09	0.9 m
10	1.0 m
...	...
30	3.0 m

11	Ribbon length
00	No fan-out

12	Connector type on input port
	No connector available if input port with 250 µm bare fiber
00	No connector
30	FC
33	FC APC wide key
34	FC APC small key
70	SC
73	SC APC 8°
74	SC APC 9°
85	LC ≤ 1.0 mm
86	LC APC ≤ 1.0 mm
90	LSH
93	LSH APC

13	Connector type on output port
00	No connector

14	Connector quality grade on input port
15	Connector quality grade on output port
	No connector available if input port with 250 µm bare fiber
K	No connector
A	Single-mode LanEco APC
N	Single-mode LanEco UPC

1 x n/2 x n broadband PLC splitter – small case with de-ribbonised output single-mode

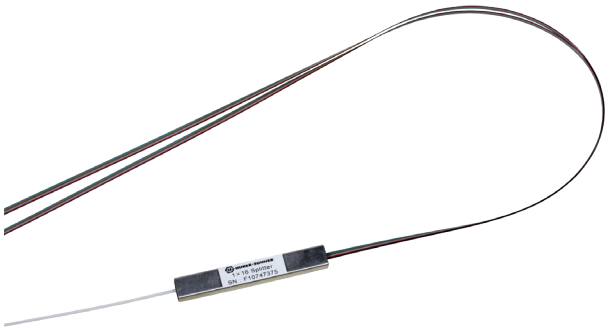

Features

- PLC splitter for all wavelength bands
- Low excess loss
- Low polarisation dependent loss (PDL)
- Excellent mechanical and environmental performance
- Telcordia GR-1209/GR-1221

Applications

- Telecommunication networks
- CATV networks data communication
- Network monitoring

Generic specifications 1 x n standard and premium grade*

Parameter	Unit	1 x 2	1 x 4	1 x 8	1 x 16	1 x 32	1 x 64
Operating wavelength	nm	1260 to 1650					
Insertion loss standard grade	dB	≤ 4.0	≤ 7.3	≤ 10.5	≤ 13.8	≤ 17.0	≤ 20.6
Uniformity standard grade	dB	≤ 0.6	≤ 0.6	≤ 0.8	≤ 1.2	≤ 1.5	≤ 1.8
PDL standard grade	dB	≤ 0.3	≤ 0.3	≤ 0.3	≤ 0.3	≤ 0.3	≤ 0.3
Insertion loss premium grade	dB	≤ 3.8	≤ 7.0	≤ 10.2	≤ 13.5	≤ 16.8	≤ 20.3
Uniformity premium grade	dB	≤ 0.5	≤ 0.5	≤ 0.8	≤ 1.2	≤ 1.2	≤ 1.8
PDL premium grade	dB	≤ 0.2	≤ 0.2	≤ 0.2	≤ 0.2	≤ 0.2	≤ 0.3
Return loss	dB	≥ 55					
Directivity	dB	≥ 55					
Operating temperature	°C	−40 to +85					
Package dimension (L x W x H)	mm	40 x 4 x 4			47 x 7 x 4		58 x 12 x 4

* Without connector loss

Generic specifications 2 x n standard and premium grade*

Parameter	Unit	2 x 4	2 x 8	2 x 16	2 x 32
Operating wavelength	nm	1260 to 1650			
Insertion loss standard grade	dB	≤ 7.5	≤ 10.8	≤ 14.3	≤ 17.8
Uniformity standard grade	dB	≤ 1.2	≤ 1.2	≤ 1.8	≤ 1.8
PDL standard grade	dB	≤ 0.3	≤ 0.3	≤ 0.3	≤ 0.3
Insertion loss premium grade	dB	≤ 7.3	≤ 10.5	≤ 14.0	≤ 17.5
Uniformity premium grade	dB	≤ 1.2	≤ 1.2	≤ 1.8	≤ 1.8
PDL premium grade	dB	≤ 0.25	≤ 0.25	≤ 0.3	≤ 0.3
Return loss	dB	≥ 55			
Directivity	dB	≥ 55			
Operating temperature	°C	−40 to +85			
Package dimension (L x W x H)	mm	55 x 7 x 4			60 x 7 x 4

* Without connector loss

Order code

1	2	-	3	4	5	6	-	7	8	-	9	10	-	11	-	12	/	13	-	14	15

1	Splitter type
P	PLC splitter

2	Number of ports
1002	1 x 2
1004	1 x 4
1008	1 x 8
1016	1 x 16
1032	1 x 32
1064	1 x 64
2004	2 x 4
2008	2 x 8
2016	2 x 16
2032	2 x 32

3	Case type
A	Small case with ribbon fiber output (de-ribbonised individual 250 µm fibers, without fan-out divider)

4	Operating wavelength
A	1260 to 1650 nm

5	Fiber type – splitter quality grade
A	Single-mode 9/125 µm – standard splitter grade
B	Single-mode 9/125 µm – premium splitter grade

6	Splitting ratio
A	Equal

7	Lead type on input port
1	250 µm bare fiber
2	0.9 mm loose tube

8	Lead type on output port
1	250 µm de-ribbonised ribbon fiber

9	Lead length on input port
10	Lead length on output port
05	0.5 m
06	0.6 m
07	0.7 m
08	0.8 m
09	0.9 m
10	1.0 m
...	...
30	3.0 m

11	Ribbon length
	From the splitter to the position where the ribbon fiber is de-ribbonised
10	10 cm (100 mm)
15	15 cm (150 mm)
20	20 cm (200 mm)
25	25 cm (250 mm)
...	...
50	50 cm (500 mm)

12	Connector type on input port
	No connector available if input port with 250 µm bare fiber
00	No connector
30	FC
33	FC APC wide key
34	FC APC small key
70	SC
73	SC APC 8°
74	SC APC 9°
86	LC APC ≤ 1.0 mm
90	LSH
93	LSH APC

13	Connector type on output port
00	No connector

14	Connector quality grade on input port
15	Connector quality grade on output port
	No connector available if input port with 250 µm bare fiber
K	No connector
A	Single-mode LanEco APC
N	Single-mode LanEco UPC

1 x n/2 x n broadband PLC splitter – small case with fan-out output single-mode

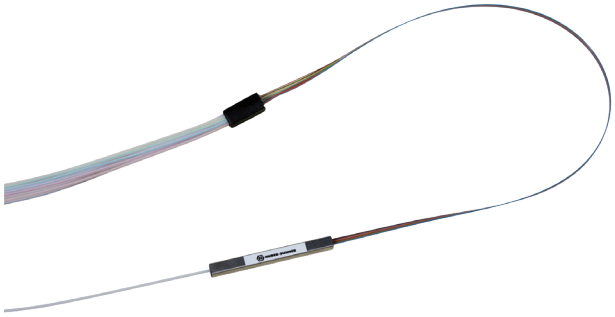

Features

- PLC splitter for all wavelength bands
- Low excess loss
- Low polarisation dependent loss (PDL)
- Excellent mechanical and environmental performance
- Telcordia GR-1209/GR-1221

Applications

- Telecommunication networks
- CATV networks data communication
- Network monitoring

Generic specifications 1 x n standard and premium grade*

Parameter	Unit	1 x 2	1 x 4	1 x 8	1 x 16	1 x 32	1 x 64
Operating wavelength	nm	1260 to 1650					
Insertion loss standard grade	dB	≤ 4.0	≤ 7.3	≤ 10.5	≤ 13.8	≤ 17.0	≤ 20.6
Uniformity standard grade	dB	≤ 0.6	≤ 0.6	≤ 0.8	≤ 1.2	≤ 1.5	≤ 1.8
PDL standard grade	dB	≤ 0.3	≤ 0.3	≤ 0.3	≤ 0.3	≤ 0.3	≤ 0.3
Insertion loss premium grade	dB	≤ 3.8	≤ 7.0	≤ 10.2	≤ 13.5	≤ 16.8	≤ 20.3
Uniformity premium grade	dB	≤ 0.5	≤ 0.5	≤ 0.8	≤ 1.2	≤ 1.2	≤ 1.8
PDL premium grade	dB	≤ 0.2	≤ 0.2	≤ 0.2	≤ 0.2	≤ 0.2	≤ 0.3
Return loss	dB	≥ 55					
Directivity	dB	≥ 55					
Operating temperature	°C	−40 to +85					
Package dimension (L x W x H)	mm	40 x 4 x 4			47 x 7 x 4		58 x 12 x 4

* Without connector loss

Generic specifications 2 x n standard and premium grade*

Parameter	Unit	2 x 4	2 x 8	2 x 16	2 x 32
Operating wavelength	nm	1260 to 1650			
Insertion loss standard grade	dB	≤ 7.5	≤ 10.8	≤ 14.3	≤ 17.8
Uniformity standard grade	dB	≤ 1.2	≤ 1.2	≤ 1.8	≤ 1.8
PDL standard grade	dB	≤ 0.3	≤ 0.3	≤ 0.3	≤ 0.3
Insertion loss premium grade	dB	≤ 7.3	≤ 10.5	≤ 14.0	≤ 17.5
Uniformity premium grade	dB	≤ 1.2	≤ 1.2	≤ 1.8	≤ 1.8
PDL premium grade	dB	≤ 0.25	≤ 0.25	≤ 0.3	≤ 0.3
Return loss	dB	≥ 55			
Directivity	dB	≥ 55			
Operating temperature	°C	−40 to +85			
Package dimension (L x W x H)	mm	55 x 7 x 4			60 x 7 x 4

* Without connector loss

Order code

1	2	-	3	4	5	6	-	7	8	-	9	10	-	11	-	12	/	13	-	14	15

1	Splitter type
P	PLC splitter

2	Number of ports
1002	1 x 2
1004	1 x 4
1008	1 x 8
1016	1 x 16
1032	1 x 32
1064	1 x 64
2004	2 x 4
2008	2 x 8
2016	2 x 16
2032	2 x 32

3	Case type
A	Small case with ribbon fiber and fan-out

4	Operating wavelength
A	1260 to 1650 nm

5	Fiber type – splitter quality grade
A	Single-mode 9/125 µm – standard splitter grade
B	Single-mode 9/125 µm – premium splitter grade

6	Splitting ratio
A	Equal

7	Lead type on input port
1	250 µm bare fiber
2	0.9 mm loose tube

8	Lead type on output port
6	Ribbon fiber with 0.9 mm small fan-out divider (divider size: 14.5 mm x 6 mm x 3.5 mm)

9	Lead length on input port
10	Lead length on output port
05	0.5 m
06	0.6 m
07	0.7 m
08	0.8 m
09	0.9 m
10	1.0 m
...	...
30	3.0 m

11	Ribbon length
	From the splitter to the position of fan-out
10	10 cm (100 mm)
15	15 cm (150 mm)
20	20 cm (200 mm)
25	25 cm (250 mm)
...	...
50	50 cm (500 mm)

12	Connector type on input port
13	Connector type on output port
	No connector available if input port with 250 µm bare fiber
00	No connector
30	FC
33	FC APC wide key
34	FC APC small key
70	SC
73	SC APC 8°
74	SC APC 9°
85	LC ≤ 1.0 mm
86	LC APC ≤ 1.0 mm
90	LSH
93	LSH APC

14	Connector quality grade on input port
15	Connector quality grade on output port
K	No connector
A	Single-mode LanEco APC
N	Single-mode LanEco UPC

1 x n broadband PLC Splitter – small case with 0.9 mm buffered fibers single-mode

Features

- PLC splitter for all wavelength bands
- Low excess loss
- Low polarisation dependent loss (PDL)
- Excellent mechanical and environmental performance
- Telcordia GR-1209/GR-1221

Applications

- Telecommunication networks
- CATV networks data communication
- Network monitoring

Generic specifications 1 x n standard and premium grade*

Parameter	Unit	1 x 2	1 x 4	1 x 8
Operating wavelength	nm	1260 to 1650		
Insertion loss standard grade	dB	≤ 4.0	≤ 7.3	≤ 10.5
Uniformity standard grade	dB	≤ 0.6	≤ 0.6	≤ 0.8
PDL standard grade	dB	≤ 0.3	≤ 0.3	≤ 0.3
Insertion loss premium grade	dB	≤ 3.8	≤ 7.0	≤ 10.2
Uniformity premium grade	dB	≤ 0.5	≤ 0.5	≤ 0.8
PDL premium grade	dB	≤ 0.2	≤ 0.2	≤ 0.2
Return loss	dB	≥ 55		
Directivity	dB	≥ 55		
Operating temperature	°C	−40 to +85		
Package dimension (L x W x H)	mm	55 x 7 x 4		

* Without connector loss

Order code

1	2	-	3	4	5	6	-	7	8	-	9	10	-	11	-	12	/	13	-	14	15

1	Splitter type
P	PLC splitter

2	Number of ports
1002	1 x 2
1004	1 x 4
1008	1 x 8

3	Case type
B	Small case with 0.9 mm buffered fiber

4	Operating wavelength
A	1260 to 1650 nm

5	Fiber type – splitter quality grade
A	Single-mode 9/125 µm – standard splitter grade
B	Single-mode 9/125 µm – premium splitter grade

6	Splitting ratio
A	Equal

7	Lead type on input port
8	Lead type on output port
2	0.9 mm buffered fiber

9	Lead length on input port
10	Lead length on output port
05	0.5 m
06	0.6 m
07	0.7 m
08	0.8 m
09	0.9 m
10	1.0 m
...	...
30	3.0 m

11	Ribbon length
00	No fan-out

12	Connector type on input port
00	No connector
30	FC
33	FC APC wide key
34	FC APC small key
70	SC
73	SC APC 8°
74	SC APC 9°
85	LC ≤ 1.0 mm
86	LC APC ≤ 1.0 mm
90	LSH
93	LSH APC

13	Connector type on output port
00	No connector

14	Connector quality grade on input port
15	Connector quality grade on output port
K	No connector
A	Single-mode LanEco APC
N	Single-mode LanEco UPC

1 x n/2 x n broadband PLC splitter – standard hard case single-mode

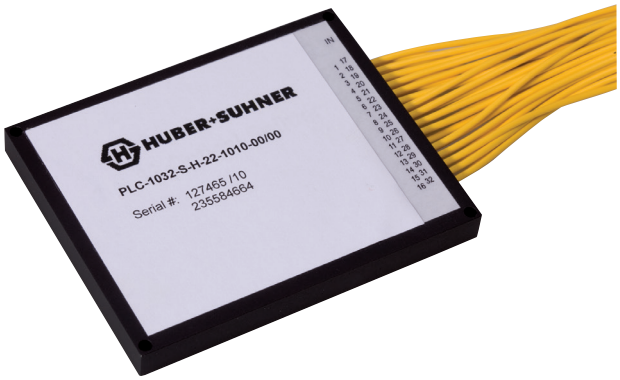

Features

- PLC splitter for all wavelength bands
- Low excess loss
- Low polarisation dependent loss (PDL)
- Excellent mechanical and environmental performance
- Telcordia GR-1209/GR-1221

Applications

- Telecommunication networks
- CATV networks data communication
- Network monitoring

Generic specifications 1 x n standard and premium grade*

Parameter	Unit	1 x 2	1 x 4	1 x 8	1 x 16	1 x 32	1 x 64
Operating wavelength	nm	1260 to 1650					
Insertion loss standard grade	dB	≤ 4.0	≤ 7.3	≤ 10.5	≤ 13.8	≤ 17.0	≤ 20.6
Uniformity standard grade	dB	≤ 0.6	≤ 0.6	≤ 0.8	≤ 1.2	≤ 1.5	≤ 1.8
PDL standard grade	dB	≤ 0.3	≤ 0.3	≤ 0.3	≤ 0.3	≤ 0.3	≤ 0.3
Insertion loss premium grade	dB	≤ 3.8	≤ 7.0	≤ 10.2	≤ 13.5	≤ 16.8	≤ 20.3
Uniformity premium grade	dB	≤ 0.5	≤ 0.5	≤ 0.8	≤ 1.2	≤ 1.2	≤ 1.8
PDL premium grade	dB	≤ 0.2	≤ 0.2	≤ 0.2	≤ 0.2	≤ 0.2	≤ 0.3
Return loss	dB	≥ 55					
Directivity	dB	≥ 55					
Operating temperature	°C	−40 to +85					
Package dimension (L x W x H)	mm	100 x 80 x 10					100 x 100 x 20

* Without connector loss

Generic specifications 2 x n standard and premium grade*

Parameter	Unit	2 x 4	2 x 8	2 x 16	2 x 32
Operating wavelength	nm	1260 to 1650			
Insertion loss standard grade	dB	≤ 7.5	≤ 10.8	≤ 14.3	≤ 17.8
Uniformity standard grade	dB	≤ 1.2	≤ 1.2	≤ 1.8	≤ 1.8
PDL standard grade	dB	≤ 0.3	≤ 0.3	≤ 0.3	≤ 0.3
Insertion loss premium grade	dB	≤ 7.3	≤ 10.5	≤ 14.0	≤ 17.5
Uniformity premium grade	dB	≤ 1.2	≤ 1.2	≤ 1.8	≤ 1.8
PDL premium grade	dB	≤ 0.25	≤ 0.25	≤ 0.3	≤ 0.3
Return loss	dB	≥ 55			
Directivity	dB	≥ 55			
Operating temperature	°C	−40 to +85			
Package dimension (L x W x H)	mm	100 x 80 x 10			

* Without connector loss

Order code

1	2	-	3	4	5	6	-	7	8	-	9	10	-	11	-	12	/	13	-	14	15

1	Splitter type
P	PLC splitter

2	Number of ports
1002	1 x 2
1004	1 x 4
1008	1 x 8
1016	1 x 16
1032	1 x 32
1064	1 x 64
2004	2 x 4
2008	2 x 8
2016	2 x 16
2032	2 x 32

3	Case type
D	Standard plastic hard case (material: ABS) (with 0.9 mm loose tube or 2.0 mm cable)

4	Operating wavelength
A	1260 to 1650 nm

5	Fiber type – splitter quality grade
A	Single-mode 9/125 µm – standard splitter grade
B	Single-mode 9/125 µm – premium splitter grade

6	Splitting ratio
A	Equal

7 8	Lead type on input port Lead type on output port
2	0.9 mm loose tube
3	2.0 mm loose tube

9 10	Lead length on input port Lead length on output port
05	0.5 m
06	0.6 m
07	0.7 m
08	0.8 m
09	0.9 m
10	1.0 m
...	...
30	3.0 m

11	Ribbon length
00	No fan-out

12 13	Connector type on input port Connector type on output port
00	No connector
30	FC
33	FC APC wide key
34	FC APC small key
70	SC
73	SC APC 8°
74	SC APC 9°
8P	LC push-pull
86	LC APC ≤ 1.0 mm
8Q	LC APC push-pull
90	LSH
93	LSH APC

14 15	Connector quality grade on input port Connector quality grade on output port
K	No connector
A	Single-mode LanEco APC
N	Single-mode LanEco UPC

1 x 2/2 x 2 dual band FBT coupler single-mode

Features

- Fiber based splitter for 1310 nm and 1550 nm bands
- Low excess loss
- Low polarisation dependent loss (PDL)
- Excellent mechanical and environmental performance
- Telcordia GR-1209/GR-1221

Applications

- Telecommunication networks
- CATV networks data communication
- Network monitoring

Generic specifications*

Parameter	Unit	50/50	40/60	30/70	20/80	10/90	05/95	01/99
Operating wavelength	nm	1310 nm ± 10 and 1550 nm ± 10						
Insertion loss	dB	≤ 3.7	≤ 4.7/2.7	≤ 6.0/1.9	≤ 7.9/1.2	≤ 11.3/0.7	≤ 18.9/0.5	≤ 24.0/0.4
Uniformity	dB	≤ 1.0	n/a					
PDL	dB	≤ 0.15		≤ 0.2		≤ 0.3		
Return loss	dB	≥ 55						
Directivity	dB	≥ 55						
Operating temperature	°C	−40 to +85						
Package dimension (Ø x L or L x W x H)	mm	Ø 3.0 x 54		Ø 3.0 x 54 or 3.0 x 60		85 x 18 x 6.5 or 90 x 20 x 10		
Input/output tail type	–	250 µm bare fiber		0.9 mm loose tube		0.9 mm loose tube or 2.0 mm cable		

* Without connector loss

Order code

1	2	-	3	4	5	6	-	7	8	-	9	10	-	11	-	12	/	13	-	14	15

1	Splitter type
F	Fiber based splitter

2	Number of ports
1002	1 x 2
2002	2 x 2

3	Case type
D	Standard plastic hard case (with 0.9 mm loose tube or 2.0 mm cable)
E	Tubular case (with 250 µm bare fiber)
F	Tubular case (with 0.9 mm loose tube)

4	Operating wavelength
B	1310 nm ±10 and 1550 nm ±10

5	Fiber type – splitter quality grade
A	Single-mode 9/125 µm – standard splitter grade

6	Splitting ratio
A	50:50
B	40:60
C	30:70
D	20:80
E	10:90
F	05:95
G	01:99

7	Lead type on input port
8	Lead type on output port
1	250 µm bare fiber (with tubular case code E only)
2	0.9 mm loose tube (with tubular case code F or standard plastic case code D)
3	2.0 mm cable (with standard plastic case code D only)

9	Lead length on input port
10	Lead length on output port
05	0.5 m
06	0.6 m
07	0.7 m
08	0.8 m
09	0.9 m
10	1.0 m
...	...
30	3.0 m

11	Ribbon length
00	No fan-out

12	Connector type on input port
13	Connector type on output port
	No connector available if input/output port with 250 µm bare fiber
00	No connector
30	FC
33	FC APC wide key
34	FC APC small key
70	SC
73	SC APC 8°
74	SC APC 9°
85	LC ≤ 1.0 mm
8P	LC push-pull
86	LC APC ≤ 1.0 mm
8Q	LC APC push-pull
90	LSH
93	LSH APC

14	Connector quality grade on input port
15	Connector quality grade on output port
	No connector available if input/output port with 250 µm bare fiber
K	No connector
A	Single-mode LanEco APC
N	Single-mode LanEco UPC

1 x 2 dual band FBT coupler single-mode

HUBER+SUHNER standard items can be used for various applications and in different configurations.

The extended 0.9 mm loose tube input and output length of 2.0 m each side covers a wide range of different required tail lengths. This enables to dispose these H+S standard types for many different applications, by cutting the tails to the appropriate length and terminate the ends with connector types as needed.

The 0.9 mm loose tube can be terminated with all kind of H+S single-mode connectors or be used for direct splicing in a tray, cassette or 19 inch box.

Features

- Fiber based splitter for 1310 nm and 1550 nm bands
- Low excess loss
- Low polarisation dependent loss (PDL)
- Excellent mechanical and environmental performance
- Telcordia GR-1209/GR-1221

Applications

- Telecommunication networks
- CATV networks data communication
- Network monitoring

1 x 2 dual band FBT coupler single-mode

Generic specifications*

Parameter	Unit	50/50	40/60	30/70	20/80	10/90	05/95	01/99
Item no.	–	84075633	84075632	84075631	84075630	84075638	84075629	84075628
Operating wavelength	nm	1310 nm ±10 and 1550 nm ±10						
Insertion loss	dB	≤ 3.7	≤ 4.7/2.7	≤ 6.0/1.9	≤ 7.9/1.2	≤ 11.3/0.7	≤ 18.9/0.5	≤ 24.0/0.4
Uniformity	dB	≤ 1.0	n/a					
PDL	dB	≤ 0.15		≤ 0.2		≤ 0.3		
Return loss	dB	≥ 55						
Directivity	–	≥ 55						
Operating temperature	dB	−40 to +85						
Package dimension (Ø x L)	°C	Ø 3.0 x 54 or Ø 3.0 x 60						
Input/output tail length	mm	≥ 2000	≥ 2000	≥ 2000	≥ 2000	≥ 2000	≥ 2000	≥ 2000
Input/output tail type	mm	0.9 mm loose tube						
Input/output connector type	–	no connectors						

* Without connector loss

1 x 2/2 x 2 all band FBT coupler single-mode

Features

- Fiber based splitter for all wavelength bands
- Low excess loss
- Low polarisation dependent loss (PDL)
- Excellent mechanical and environmental performance
- Telcordia GR-1209/GR-1221

Applications

- Telecommunication networks
- CATV networks data communication
- Network monitoring

Generic specifications*

Parameter	Unit	50/50	40/60	30/70	20/80	10/90	05/95	01/99
Operating wavelength	nm	1260 to 1625						
Insertion loss	dB	≤ 4.0	≤ 5.3/3.3	≤ 6.7/2.5	≤ 8.8/1.8	≤ 12.2/1.2	≤ 15.5/0.9	≤ 23.5/0.75
Uniformity **	dB	≤ 0.6/1.6	n/a					
PDL	dB	≤ 0.2						
Return loss	dB	≥ 55						
Directivity	dB	≥ 55						
Operating temperature	°C	−40 to +85						
Package dimension (Ø x L or L x W x H)	mm	Ø 3.0 x 54			Ø 3.0 x 54		85 x 18 x 6.5 or 90 x 20 x 10	
Input/output tail type	–	250 µm bare fiber			0.9 mm loose tube		0.9 mm loose tube or 2.0 mm cable	

* Without connector loss
**Uniformity ≤ 0.6 dB at center wavelengths 1310 nm, 1490 nm and 1550 nm, ≤1.6 dB over operating wavelength 1260 nm to 1620 nm

Order code

1	2	–	3	4	5	6	–	7	8	–	9	10	–	11	–	12	/	13	–	14	15

1	Splitter type
F	Fiber based splitter

2	Number of ports
1002	1 x 2
2002	2 x 2

3	Case type
D	Standard plastic hard case (with 0.9 mm loose tube or 2.0 mm cable)
E	Tubular case (with 250 µm bare fiber)
F	Tubular case (with 0.9 mm loose tube)

4	Operating wavelength
A	1260 to 1620 nm

5	Fiber type – splitter quality grade
A	Single-mode 9/125 µm – standard splitter grade

6	Splitting ratio
A	50:50
B	40:60
C	30:70
D	20:80
E	10:90
F	05:95
G	01:99

7	Lead type on input port
8	Lead type on output port
1	250 µm bare fiber (with tubular case code E only)
2	0.9 mm loose tube (with tubular case code F or standard plastic case code D)
3	2.0 mm cable (with standard plastic case code D only)

9	Lead length on input port
10	Lead length on output port
05	0.5 m
06	0.6 m
07	0.7 m
08	0.8 m
09	0.9 m
10	1.0 m
...	...
30	3.0 m

11	Ribbon length
00	No fan-out

12	Connector type on input port
13	Connector type on output port
	No connector available if input/output port with 250 µm bare fiber
00	No connector
30	FC
33	FC APC wide key
34	FC APC small key
70	SC
73	SC APC 8°
74	SC APC 9°
85	LC ≤ 1.0 mm
8P	LC push-pull
86	LC APC ≤ 1.0 mm
8Q	LC APC push-pull
90	LSH
93	LSH APC

14	Connector quality grade on input port
15	Connector quality grade on output port
	No connector available if input/output port with 250 µm bare fiber
K	No connector
A	Single-mode LanEco APC
N	Single-mode LanEco UPC

1 x 2/2 x 2 FBT coupler multi-mode

Features

- Fiber based splitter for 850 nm and/or 1300 nm bands
- Low excess loss
- Low polarisation dependent loss (PDL)
- Excellent mechanical and environmental performance
- Telcordia GR-1209/GR-1221

Applications

- Telecommunication networks
- CATV networks data communication
- Network monitoring

Generic specifications*

Parameter	Unit	50/50	40/60	30/70	20/80	10/90	05/95	01/99
Operating wavelength	nm	850 nm ± 40 or 1300 nm ± 40 / 850 nm and 1300 nm ± 40						
Insertion loss	dB	≤ 4.0	≤ 5.0/3.0	≤ 6.3/2.4	≤ 8.1/1.7	≤ 11.6/1.2	≤ 15.0/1.0	≤ 22.8/0.8
Uniformity	dB	≤ 0.8	n/a					
PDL	dB	n/a						
Return loss	dB	≥ 40						
Directivity	dB	≥ 40						
Operating temperature	°C	−40 to +85						
Package dimension (Ø x L or L x W x H)	mm	Ø 3.0 x 54 or Ø 3.0 x 60			Ø 3.0 x 54 or Ø 3.0 x 60			90 x 20 x 9.5 or 85 x 18 x 6.5
Input/output tail type	–	250 µm bare fiber			0.9 mm loose tube			0.9 mm loose tube or 2.0 mm cable
Fiber type	–	50/125 µm or 62.5/125 µm						

* Without connector loss

Order code

1	2	-	3	4	5	6	-	7	8	-	9	10	-	11	-	12	/	13	-	14	15

1	Splitter type
F	Fiber based splitter

2	Number of ports
1002	1 x 2
2002	2 x 2

3	Case type
D	Standard plastic hard case (with 0.9 mm loose tube or 2.0 mm cable)
E	Tubular case (with 250 µm bare fiber)
F	Tubular case (with 0.9 mm loose tube)

4	Operating wavelength
D	850 nm ±40, LED optimized
F	1300 nm ±40, LED optimized
H	850 nm ±40 and 1300 nm ±40, LED optimized

5	Fiber type – splitter quality grade
I	Multi-mode 50/125 µm – standard splitter grade
P	Multi-mode 62.5/125 µm – standard splitter grade

6	Splitting ratio
A	50:50
B	40:60
C	30:70
D	20:80
E	10:90
F	05:95
G	01:99

7 8	Lead type on input port Lead type on output port
1	250 µm bare fiber (with tubular case code E only)
2	0.9 mm loose tube (with tubular case code F or standard plastic case code D)
3	2.0 mm cable (with standard plastic case code D only)

9 10	Lead length on input port Lead length on output port
05	0.5 m
06	0.6 m
07	0.7 m
08	0.8 m
09	0.9 m
10	1.0 m
...	...
30	3.0 m

11	Ribbon length
00	No fan-out

12 13	Connector type on input port Connector type on output port
	No connector available if input/output port with 250 µm bare fiber
00	No connector
20	ST-HQ
22	ST-Security
24	ST-LEAN
30	FC
70	SC
85	LC ≤ 1.0 mm
8P	LC push-pull
90	LSH

14 15	Connector quality grade on input port Connector quality on output port
K	No connector
M	Multi-mode (no connector available if input/output port with 250 µm bare fiber)

1310/1550 nm WWDM single-mode

Features

- Low insertion loss
- High channel isolation
- Excellent mechanical and environmental performance

Applications

- Telecommunication networks
- CATV networks data communication
- FTTH applications

Generic specifications*

Parameter	Unit	Standard grade		Premium grade
Operating wavelength	nm	1310/1550 ± 15		
Insertion loss	dB	≤ 0.6		≤ 0.4
Isolation	dB	≥ 16 dB		≥ 17 dB
PDL	dB	≤ 0.15		≤ 0.1
Return loss	dB	≥ 55 dB		
Directivity	dB	≥ 60 dB		
Operating temperature	°C	−40 to +85		
Package dimension (Ø x L or L x W x H)	mm	Ø 3.0 x 54	Ø 3.0 x 54 or Ø 3.0 x 60	85 x 18 x 6.5 or 90 x 20 x 10
Input/output tail type	–	250 µm bare fiber	0.9 mm loose tube	0.9 mm loose tube or 2.0 mm cable

* Without connector loss

Order code

1	2	3	4	-	5	/	6	-	7	8	-	9	10	-	11	/	12	-	13	14

1	WDM type
W	Wide Wavelength Division Multiplexer (WWDM)

2	Fiber type – splitter quality grade
A	Single-mode 9/125 µm – standard grade
B	Single-mode 9/125 µm – premium grade

3	Isolation type
S	Standard isolation

4	Case type
D	Standard plastic hard case (with 0.9 mm loose tube or 2.0 mm cable)
E	Tubular case (with 250 µm bare fiber)
F	Tubular case (with 0.9 mm loose tube)

5	Wavelength 1
31	1310 nm

6	Wavelength 2
55	1550 nm

7 8	Lead type on input port Lead type on output port
1	250 µm bare fiber (with tubular case code E only)
2	0.9 mm loose tube (with tubular case (code F) or standard plastic case code D)
3	2.0 mm cable (with standard plastic case code D only)

9 10	Lead length on input port Lead length on output port
05	0.5 m
06	0.6 m
07	0.7 m
08	0.8 m
09	0.9 m
10	1.0 m
...	...
30	3.0 m

11 12	Connector type on input port Connector type on output port
	No connector available if input/output port with 250 µm bare fiber
00	No connector
30	FC
33	FC APC wide key
34	FC APC small key
70	SC
73	SC APC 8°
74	SC APC 9°
85	LC ≤ 1.0 mm
86	LC APC ≤ 1.0 mm
90	LSH
93	LSH APC

13 14	Connector quality grade on input port Connector quality on output port
	No connector available if input/output port with 250 µm bare fiber
K	No connector
A	Single-mode LanEco APC
N	Single-mode LanEco UPC

1310 + 1490/1550 nm FWDM filter single-mode

Features

- Wide pass band
- Low insertion loss
- High channel isolation
- Excellent mechanical and environmental performance

Applications

- Telecommunication networks
- CATV networks data communication
- FTTH applications

Generic specifications*

Parameter	Unit	Value
Central wavelength	nm	1310, 1490, 1550
Pass band	nm	1550 ±10
Reflection band	nm	1310 ±50 / 1490 ±10
Pass band insertion loss	dB	≤ 0.8
Reflection band insertion loss	dB	≤ 0.6
Pass band isolation	dB	≥ 30
Reflection band isolation	dB	≥ 14
Directivity	dB	≥ 55
Return loss	dB	≥ 50
PDL	dB	≤ 0.1
Power handling (max.)	mW	500
Operating temperature	°C	−40 to +85
Package dimension (Ø x L)	mm	Ø 5.5 x 34
Input/output tail type	–	0.9 mm loose tube

* Without connector loss

H+S standard item

Parameter	Unit	
Item no.	–	84076293
Generic specification	–	see specification above
Connector type input/output	–	no connectors
Input/output tail length	mm	≥ 1000

Order code

1	2	3	4	- 5	+ 6	/ 7	- 8	9	- 10	11	- 12	/ 13	- 14	15

1	**WDM type**
F	Filter Wavelength Division Multiplexer (FWDM)

2	**Fiber type – splitter quality grade**
A	Single-mode 9/125 µm – standard splitter grade

3	**Isolation type**
S	Standard isolation

4	**Case type**
F	Tubular case (with 0.9 mm loose tube)

5	**Wavelength 1 (reflection port)**
31	1310 nm

6	**Wavelength 2 (reflection port)**
49	1490 nm

7	**Wavelength 3 (pass port)**
55	1550 nm

8	**Lead type on input port**
9	**Lead type on output port**
2	0.9 mm loose tube

10	**Lead length on input port**
11	**Lead length on output port**
05	0.5 m
06	0.6 m
07	0.7 m
08	0.8 m
09	0.9 m
10	1.0 m
...	...
30	3.0 m

12	**Connector type on input port**
13	**Connector type on output port**
00	No connector
30	FC
33	FC APC wide key
34	FC APC small key
70	SC
73	SC APC 8°
74	SC APC 9°
85	LC ≤ 1.0 mm
86	LC APC ≤ 1.0 mm
90	LSH
93	LSH APC

14	**Connector quality grade on input port**
15	**Connector quality on output port**
K	No connector
A	Single-mode LanEco APC
N	Single-mode LanEco UPC

Plug type attenuator SC single-mode

Features

- Push-pull type
- Maximum stability and reliability
- Flat spectral response
- SC interface according to IEC 61754-4

Applications

- Passive optical networks (B-PON, G-PON, E-PON)
- Multi wavelength systems balancing
- Optical power receivers protection

Specifications

Parameter	Single-mode UPC	Single-mode APC	Test method
Wavelength bandwidth	1260 to 1360 nm and 1460 to 1625 nm		
Attenuation	from 1 to 30 dB, in steps of 1 dB		IEC 61300-3-4
Spectral tolerances	±15 % on nominal attenuation value at 1 to 4 dB ±10 % on nominal attenuation value at 5 to 30 dB		IEC 61300-3-7
Repeatability of IL	±0.1 dB		over service life
Return loss	> 50 dB	> 60 dB	IEC 61300-3-6
Durability	min. 1000 mating cycles		
Operating temperature	−25 to +70 °C		
Housing material	zinc nickel plated		
Housing colour	metallic		
Ferrule	full ceramic		

Dimensional drawing

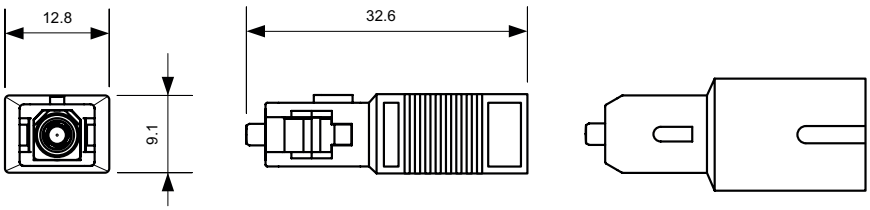

Ordering information plug type attenuator SC

Plug type attenuator SC/UPC

Attenuation (dB)	Item no.	Description
1.0	84035909	OFA-FSC-U-010-S-01-001
2.0	23022439	OFA-FSC-U-020-S-01-001
3.0	84035925	OFA-FSC-U-030-S-01-001
4.0	23022441	OFA-FSC-U-040-S-01-001
5.0	23022443	OFA-FSC-U-050-S-01-001
6.0	23022445	OFA-FSC-U-060-S-01-001
7.0	84070753	OFA-FSC-U-070-S-01-001
8.0	23022447	OFA-FSC-U-080-S-01-001
9.0	84070754	OFA-FSC-U-090-S-01-001
10.0	23022449	OFA-FSC-U-100-S-01-001
11.0	84070755	OFA-FSC-U-110-S-01-001
12.0	84070756	OFA-FSC-U-120-S-01-001
13.0	84070757	OFA-FSC-U-130-S-01-001
14.0	84070758	OFA-FSC-U-140-S-01-001
15.0	23022451	OFA-FSC-U-150-S-01-001
16.0	84070759	OFA-FSC-U-160-S-01-001
17.0	84070760	OFA-FSC-U-170-S-01-001
18.0	84070761	OFA-FSC-U-180-S-01-001
19.0	84070762	OFA-FSC-U-190-S-01-001
20.0	23022453	OFA-FSC-U-200-S-01-001
21.0	84070763	OFA-FSC-U-210-S-01-001
22.0	84070764	OFA-FSC-U-220-S-01-001
23.0	84070765	OFA-FSC-U-230-S-01-001
24.0	84070766	OFA-FSC-U-240-S-01-001
25.0	84070767	OFA-FSC-U-250-S-01-001
26.0	84070768	OFA-FSC-U-260-S-01-001
27.0	84070769	OFA-FSC-U-270-S-01-001
28.0	84070770	OFA-FSC-U-280-S-01-001
29.0	84070771	OFA-FSC-U-290-S-01-001
30.0	84070772	OFA-FSC-U-300-S-01-001

Plug type attenuator SC/APC

Attenuation (dB)	Item no.	Description
1.0	84070936	OFA-FSC-A-010-S-01-001
2.0	23022338	OFA-FSC-A-020-S-01-001
3.0	84070937	OFA-FSC-A-030-S-01-001
4.0	23022340	OFA-FSC-A-040-S-01-001
5.0	23022341	OFA-FSC-A-050-S-01-001
6.0	23022343	OFA-FSC-A-060-S-01-001
7.0	84070938	OFA-FSC-A-070-S-01-001
8.0	23022345	OFA-FSC-A-080-S-01-001
9.0	84070939	OFA-FSC-A-090-S-01-001
10.0	23022347	OFA-FSC-A-100-S-01-001
11.0	84070940	OFA-FSC-A-110-S-01-001
12.0	84070941	OFA-FSC-A-120-S-01-001
13.0	84070942	OFA-FSC-A-130-S-01-001
14.0	84070943	OFA-FSC-A-140-S-01-001
15.0	23022349	OFA-FSC-A-150-S-01-001
16.0	84070944	OFA-FSC-A-160-S-01-001
17.0	84070945	OFA-FSC-A-170-S-01-001
18.0	84070946	OFA-FSC-A-180-S-01-001
19.0	84070947	OFA-FSC-A-190-S-01-001
20.0	23022351	OFA-FSC-A-200-S-01-001
21.0	84070948	OFA-FSC-A-210-S-01-001
22.0	84070949	OFA-FSC-A-220-S-01-001
23.0	84070950	OFA-FSC-A-230-S-01-001
24.0	84070951	OFA-FSC-A-240-S-01-001
25.0	84070952	OFA-FSC-A-250-S-01-001
26.0	84070953	OFA-FSC-A-260-S-01-001
27.0	84070954	OFA-FSC-A-270-S-01-001
28.0	84070955	OFA-FSC-A-280-S-01-001
29.0	84070956	OFA-FSC-A-290-S-01-001
30.0	84070957	OFA-FSC-A-300-S-01-001

Plug type attenuator FC single-mode

Features

- Threaded nut type
- Maximum stability and reliability
- Flat spectral response
- FC interface according to IEC 61754-13

Applications

- Passive optical networks (B-PON, G-PON, E-PON)
- Multi wavelength systems balancing
- Optical power receivers protection

Specifications

Parameter	Single-mode UPC	Single-mode APC	Test method
Wavelength bandwidth	1260 to 1360 nm and 1460 to 1625 nm		
Attenuation	from 1 to 30 dB, in steps of 1 dB		IEC 61300-3-4
Spectral tolerances	±15 % on nominal attenuation value at 1 to 4 dB ±10 % on nominal attenuation value at 5 to 30 dB		IEC 61300-3-7
Repeatability of IL	±0.1 dB		over service life
Return loss	> 50 dB	> 60 dB	IEC 61300-3-6
Durability	min. 1000 mating cycles		
Operating temperature	−25 to +70 °C		
Housing material	zinc nickel plated		
Housing colour	metallic		
Ferrule	full ceramic		

Dimensional drawing

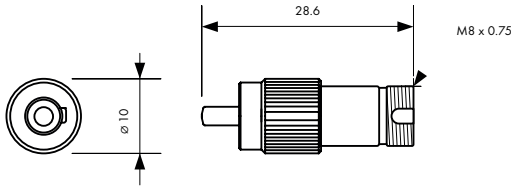

wrench size: male 2.14 mm, 0/-0.05
female 2.15 mm, 0/+0.05

Ordering information plug type attenuator FC

Plug type attenuator FC/UPC

Attenuation (dB)	Item no.	Description
1.0	84035928	OFA-FC-U-010-S-01-001
2.0	23022320	OFA-FC-U-020-S-01-001
3.0	84035931	OFA-FC-U-030-S-01-001
4.0	23022322	OFA-FC-U-040-S-01-001
5.0	23022324	OFA-FC-U-050-S-01-001
6.0	23022326	OFA-FC-U-060-S-01-001
7.0	84071057	OFA-FC-U-070-S-01-001
8.0	23022328	OFA-FC-U-080-S-01-001
9.0	84071058	OFA-FC-U-090-S-01-001
10.0	23022330	OFA-FC-U-100-S-01-001
11.0	84071059	OFA-FC-U-110-S-01-001
12.0	84071060	OFA-FC-U-120-S-01-001
13.0	84071061	OFA-FC-U-130-S-01-001
14.0	84071062	OFA-FC-U-140-S-01-001
15.0	23022332	OFA-FC-U-150-S-01-001
16.0	84071063	OFA-FC-U-160-S-01-001
17.0	84071064	OFA-FC-U-170-S-01-001
18.0	84071065	OFA-FC-U-180-S-01-001
19.0	84071066	OFA-FC-U-190-S-01-001
20.0	23022335	OFA-FC-U-200-S-01-001
21.0	84071067	OFA-FC-U-210-S-01-001
22.0	84071068	OFA-FC-U-220-S-01-001
23.0	84071069	OFA-FC-U-230-S-01-001
24.0	84071070	OFA-FC-U-240-S-01-001
25.0	84071071	OFA-FC-U-250-S-01-001
26.0	84071072	OFA-FC-U-260-S-01-001
27.0	84071073	OFA-FC-U-270-S-01-001
28.0	84071074	OFA-FC-U-280-S-01-001
29.0	84071075	OFA-FC-U-290-S-01-001
30.0	84071076	OFA-FC-U-300-S-01-001

Plug type attenuator FC/APC

Attenuation (dB)	Item no.	Description
1.0	84071190	OFA-FC-A-010-S-01-001
2.0	23022293	OFA-FC-A-020-S-01-001
3.0	84071191	OFA-FC-A-030-S-01-001
4.0	23022295	OFA-FC-A-040-S-01-001
5.0	23022297	OFA-FC-A-050-S-01-001
6.0	23022299	OFA-FC-A-060-S-01-001
7.0	84071192	OFA-FC-A-070-S-01-001
8.0	23022301	OFA-FC-A-080-S-01-001
9.0	84071193	OFA-FC-A-090-S-01-001
10.0	23022308	OFA-FC-A-100-S-01-001
11.0	84071194	OFA-FC-A-110-S-01-001
12.0	84071195	OFA-FC-A-120-S-01-001
13.0	84071196	OFA-FC-A-130-S-01-001
14.0	84071197	OFA-FC-A-140-S-01-001
15.0	23022310	OFA-FC-A-150-S-01-001
16.0	84071198	OFA-FC-A-160-S-01-001
17.0	84071199	OFA-FC-A-170-S-01-001
18.0	84071200	OFA-FC-A-180-S-01-001
19.0	84071201	OFA-FC-A-190-S-01-001
20.0	23022312	OFA-FC-A-200-S-01-001
21.0	84071202	OFA-FC-A-210-S-01-001
22.0	84071203	OFA-FC-A-220-S-01-001
23.0	84071204	OFA-FC-A-230-S-01-001
24.0	84071205	OFA-FC-A-240-S-01-001
25.0	84071206	OFA-FC-A-250-S-01-001
26.0	84071207	OFA-FC-A-260-S-01-001
27.0	84071208	OFA-FC-A-270-S-01-001
28.0	84071209	OFA-FC-A-280-S-01-001
29.0	84071210	OFA-FC-A-290-S-01-001
30.0	84071211	OFA-FC-A-300-S-01-001

Plug type attenuator LC UPC plug type

Features

- Latched push-pull type, small form factor (1.25 mm ferrule)
- High stability and reliability
- Flat spectral response
- LC interface according to IEC 61754-20

Applications

- Passive optical networks (B-PON, G-PON, E-PON)
- Multi wavelength systems balancing
- Optical power receivers protection

Specifications

Parameter	Single-mode UPC
Operating wavelength	1260 to 1625 nm
Attenuation	from 1.0 to 20.0 dB, in 1.0 dB steps
Tolerances (1.0 to 5.0 dB)	±0.75 dB
Tolerances (6.0 to 20.0 dB)	±15 %
Return loss	≥ 50 dB
Optical power (max.)	250 mW
Operating temperature	−25 to +70 °C
Durability	min. 1000 mating cycles
Housing material	plastic, UL94-V0
Housing colour	black/blue

Dimensional drawing

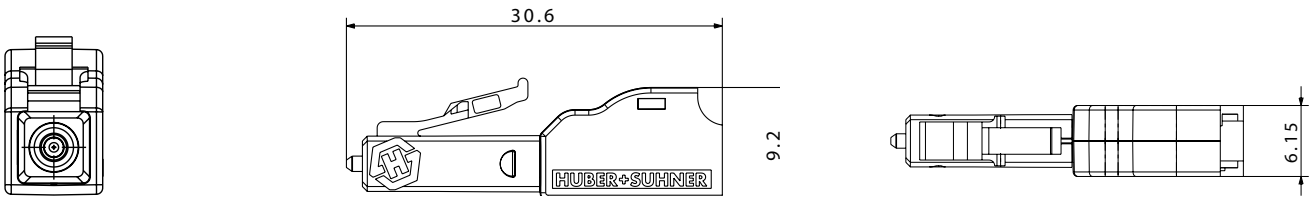

Ordering information attenuator LC UPC single-mode

Attenuation (dB)	Item no.	Description
1.0 dB	84125364	OFA-FLC-U-010-S-02-001
2.0 dB	84125365	OFA-FLC-U-020-S-02-001
3.0 dB	84125366	OFA-FLC-U-030-S-02-001
3.5 dB	84125367	OFA-FLC-U-035-S-02-001
4.0 dB	84125368	OFA-FLC-U-040-S-02-001
4.5 dB	84125369	OFA-FLC-U-045-S-02-001
5.0 dB	84125370	OFA-FLC-U-050-S-02-001
5.5 dB	84125371	OFA-FLC-U-055-S-02-001
6.0 dB	84125372	OFA-FLC-U-060-S-02-001
6.5 dB	84125373	OFA-FLC-U-065-S-02-001
7.0 dB	84125374	OFA-FLC-U-070-S-02-001
7.5 dB	84125375	OFA-FLC-U-075-S-02-001
8.0 dB	84125376	OFA-FLC-U-080-S-02-001
8.5 dB	84125377	OFA-FLC-U-085-S-02-001
9.0 dB	84125378	OFA-FLC-U-090-S-02-001
10.0 dB	84123863	OFA-FLC-U-100-S-02-001
11.0 dB	84125379	OFA-FLC-U-110-S-02-001
12.0 dB	84125380	OFA-FLC-U-120-S-02-001
13.0 dB	84125381	OFA-FLC-U-130-S-02-001
14.0 dB	84125382	OFA-FLC-U-140-S-02-001
15.0 dB	84125383	OFA-FLC-U-150-S-02-001
16.0 dB	84125384	OFA-FLC-U-160-S-02-001
17.0 dB	84125385	OFA-FLC-U-170-S-02-001
18.0 dB	84125386	OFA-FLC-U-180-S-02-001
19.0 dB	84125387	OFA-FLC-U-190-S-02-001
20.0 dB	84125388	OFA-FLC-U-200-S-02-001

Plug type attenuator LC APC single-mode

Features

- Latched push-pull type, small form factor (1.25 mm ferrule)
- High stability and reliability
- Flat spectral response
- LC interface according to IEC 61754-20

Applications

- Passive optical networks (B-PON, G-PON, E-PON)
- Multi wavelength systems balancing
- Optical power receivers protection

Specifications

Parameters	Unit	Values	
Operating Wavelength	nm	1260nm ~ 1625nm	
Center Wavelenths	nm	1260nm ~ 1360nm & 1460nm ~ 1625nmm	
Attenuation	dB	1.0dB ~ 30.0dB in 1dB steps	
Attenuation Tolerance (max.)	dB	1.0dB ~ 10.0dB 11.0dB ~ 30.0dB	±0.5dB ±1.0dB
Return Loss	dB	≥ 60.0dB	
Maximum Input Power	mW	250mW	
Operating Temperature	°C	–40°C ~ +75°C	
Durability	---	min. 1000 cycles	
Housing Material	---	Plastic UL94-V0	
Housing Colour	---	Green	
Ferrule / Sleeve Material	---	Full ceramic	

Dimensional drawing

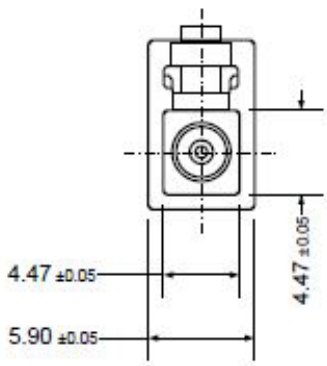

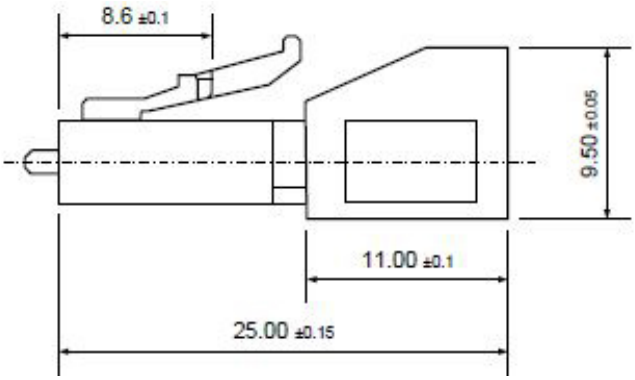

Ordering information attenuator LC APC single-mode

Attenuation (dB)	Item no.	Description
1.0 dB	85086846	OFA-FLC-A-010-S-02-001
2.0 dB	85086847	OFA-FLC-A-020-S-02-001
3.0 dB	85086848	OFA-FLC-A-030-S-02-001
4.0 dB	85086849	OFA-FLC-A-040-S-02-001
5.0 dB	85086850	OFA-FLC-A-050-S-02-001
6.0 dB	85086851	OFA-FLC-A-060-S-02-001
7.0 dB	85086852	OFA-FLC-A-070-S-02-001
8.0 dB	85086853	OFA-FLC-A-080-S-02-001
9.0 dB	85086854	OFA-FLC-A-090-S-02-001
10.0 dB	85086855	OFA-FLC-A-100-S-02-001
11.0 dB	85086856	OFA-FLC-A-110-S-02-001
12.0 dB	85086857	OFA-FLC-A-120-S-02-001
13.0 dB	85086858	OFA-FLC-A-130-S-02-001
14.0 dB	85086859	OFA-FLC-A-140-S-02-001
15.0 dB	85086860	OFA-FLC-A-150-S-02-001
16.0 dB	85086861	OFA-FLC-A-160-S-02-001
17.0 dB	85086862	OFA-FLC-A-170-S-02-001
18.0 dB	85086863	OFA-FLC-A-180-S-02-001
19.0 dB	85086864	OFA-FLC-A-190-S-02-001
20.0 dB	85086865	OFA-FLC-A-200-S-02-001
21.0 dB	85086866	OFA-FLC-A-210-S-02-001
22.0 dB	85086867	OFA-FLC-A-220-S-02-001
23.0 dB	85086868	OFA-FLC-A-230-S-02-001
24.0 dB	85086869	OFA-FLC-A-240-S-02-001
25.0 dB	85086870	OFA-FLC-A-250-S-02-001
26.0 dB	85086871	OFA-FLC-A-260-S-02-001
27.0 dB	85086872	OFA-FLC-A-270-S-02-001
28.0 dB	85086873	OFA-FLC-A-280-S-02-001
29.0 dB	85086874	OFA-FLC-A-290-S-02-001
30.0 dB	85086875	OFA-FLC-A-300-S-02-001

HUBER+SUHNER AG
Fiber Optics Division
Degersheimerstrasse 14
9100 Herisau
Switzerland
Phone +41 71 353 4111
Fax +41 71 353 4444
hubersuhner.com

4934/4743/08.2019

HUBER+SUHNER is certified according to ISO 9001, EN(AS)9100, ISO 14001, ISO/TS 16949 and IRIS.